As Compared to KLDX-SMT2-0202-xTR Rev. B5

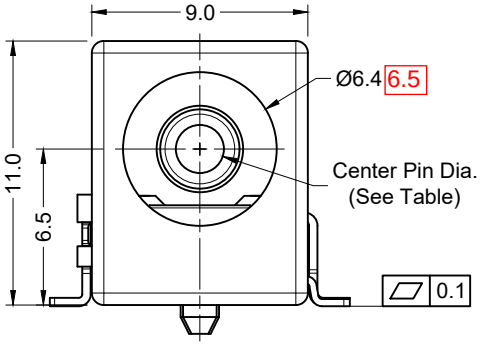

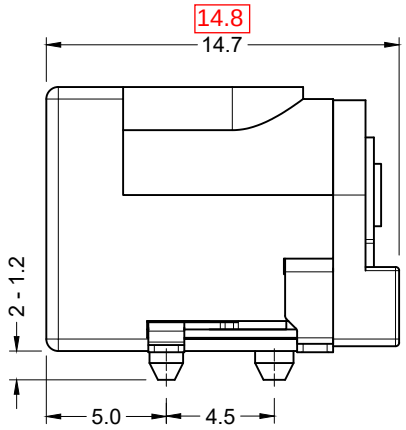

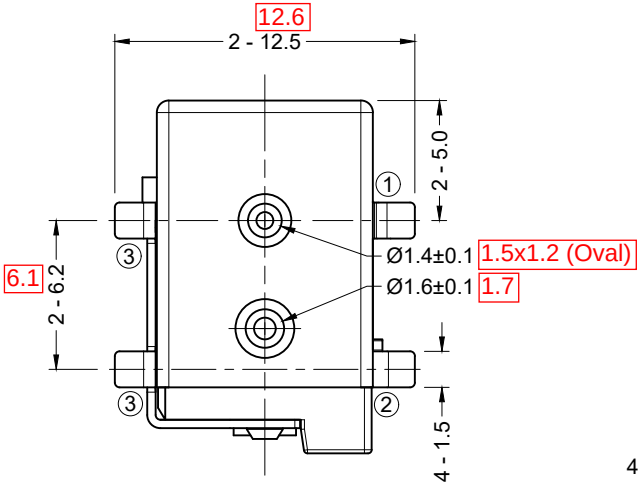

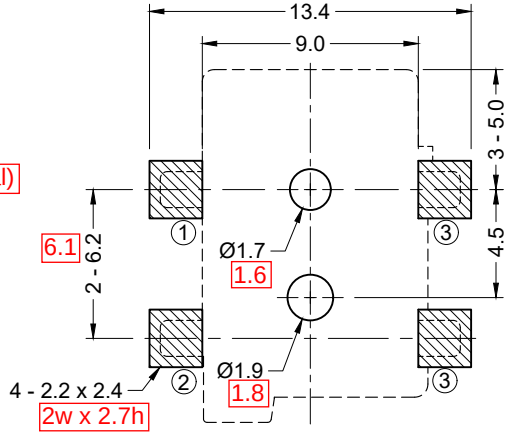

Recommended PCB Layout
(Top View)

Materials and Finish

Housing: High Temperature Thermoplastic, UL 94V-0 Rated, Black Color

Contact Material:
- Center Pin: Copper Alloy, Nickel Plated
- Contact #1: Copper Alloy, Silver Plated
- Contact #2: Copper Alloy, Silver Plated
- Contact #3: Copper Alloy, Silver Plated

Electrical Characteristics

Rated Current: 5A 3.5A

Rated Voltage: 20V DC 24V

Insulation Resistance:
100 Megohms Min. at 500V DC

Contact Resistance:
30 Milliohms Max. (Initial)
60 Milliohms Max. (After Durability)

Dielectric Withstanding Voltage:
500V AC RMS for 1 Minute

Mechanical Characteristics

Insertion Force: 0.3 Kg - 3.0 Kg 2.0

Withdrawal Force: 0.3 Kg - 3.0 Kg

Durability: 5000 Mating Cycles Min.

Operating Temperature:
-25°C to +85°C
+65°C

Schematic

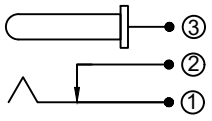

Part Number	Center Pin Dia.	
KLDX-SMT2-0202-ATR-1	$Ø2.0^{+0}_{-0.1}$	±0.05
KLDX-SMT2-0202-BTR-1	$Ø2.5^{+0}_{-0.1}$	±0.05

TOBY
THE VITAL COMPONENT

RoHS COMPLIANT

Tolerances
0.35 X.X ± 0.25
0.25 X.XX ± 0.20
Unless Stated Otherwise

PRELIMINARY
PART IN DESIGN
SPECIFICATION SUBJECT TO CHANGE

REV.	DATE	DESCRIPTION	REV. BY	CHK. BY	DRAWN BY	DATE
A0	11/10/22	New Drawing	C. Kelleher	C. Furumasu	C. Kelleher	11/08/22
A0.1	02/01/23	Update Layout	C. Kelleher	C. Furumasu		
					UNITS	
					mm	

KLDX-SMT2-0202-xTR-1
x = Center Pin Option

DC Power Jack, SMT, R/A,
Tape & Reel, RoHS Compliant

KYCON